SMOKE-WE

Smoke detector

ENFORCER
two way wireless technology

Pyronix
www.pyronix.com

Features

- Photoelectric Smoke Alarm
- Removable smoke chamber for easy maintenance
- Automatic calibration and self test
- Fully supervised for low battery and malfunction
- Manual test button helps to verify battery status and alarm operation
- Built-in 85dB local sounder and flashing red LED light will indicate prescence of smoke

WARRANTY

This product is sold subject to our standard warranty against defects in workmanship for a period of two years. Please note: In positions where the Deltabell WE casing is subjected to high levels of U.V. sunlight, there may be risk of case colour fading, this is not covered by the warranty. In the interest of continuing improvement of quality, customer care and design, Pyronix Ltd reserve the right to amend specifications without giving prior notice.

CE

Dimensions

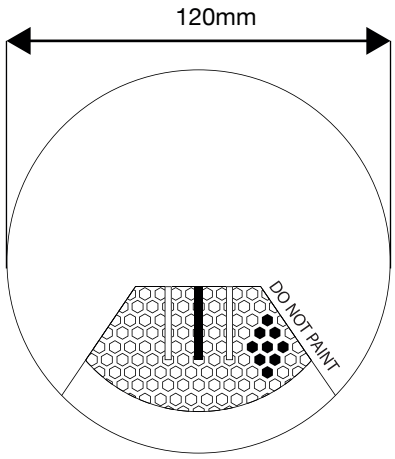

Width:	120mm
Height:	120mm
Depth:	5.3mm

Customer support:
Customer support line (UK only): +44(0)845 6434 999 (local rate)
Or telephone: +44(0)1709 535225
Hours: Mon to Fri, 8:00am till 6:30pm

Email: customer.support@pyronix.com
Website: www.pyronix.com

RINS1367-1

Introduction

The Enforcer wireless photoelectric smoke alarm is designed to sense smoke that comes into the alarm chamber. It does not sense gas, heat, or flame. This smoke alarm is designed to give early warning of developing fires by giving off the alarm sounds from its built-in alarm piezo. It can provide precious time for you and your family to escape before a fire spreads. However, the smoke alarm makes such pre-warning of fire accident possible, only if the smoke alarm is located, installed, and maintained properly as described in this manual.

WARNING: This alarm is not meant to be used in non-residential buildings. Warehouses, industrial or commercial buildings, and special purpose non-residential buildings require special fire detection and alarm systems. This smoke alarm alone is not a suitable substitute for complete fire detection systems for places where many people live or work, such as hotels or motels. The same is true of dormitories, hospitals, nursing homes or group homes of any kind, even if they were once single family homes. Please refer NFPA 101, the Life Safety Code, NFPA71, 72A, 72B, 72C, 72D, and 72E for smoke alarm requirements for fire protection in buildings not defined as "households".

WARNING: This smoke alarm will not alert people who are hard of hearing. It is strongly recommended that the special-purpose smoke alarms, using lights or vibrating devices, should be installed to alert occupants who are hard of hearing.

Learning the SMOKE-WE onto the Enforcer Control Panel

When you are ready to learn the device to the control panel receiving equipment, and when the equipment is in the learn mode (see Enforcer Programming Manual) follow the procedure below.

1. Unclip the base of the smoke detector at the three points shown on Figure 1.

Note: Open the device very carefully so as not to damage any wiring.

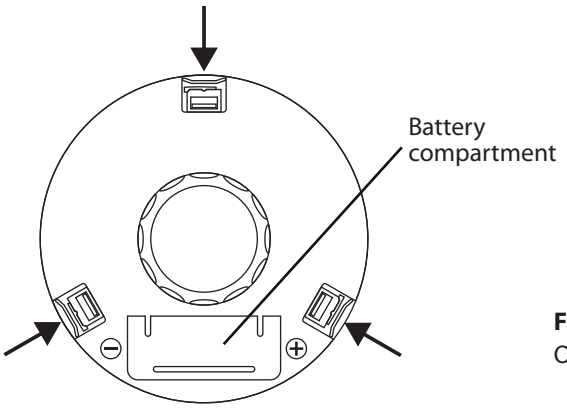

Figure 1
Opening the smoke detector

2. Make sure the battery is installed correctly and the plastic wrapping removed.
3. Press and hold the Learn button until the LED flashes red and green, then release.
4. The device is correctly learnt when the Green LED flashes.

Wireless signal strength test

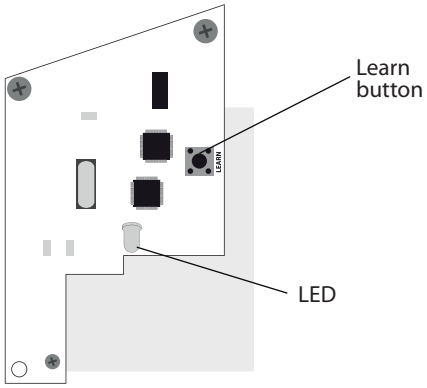

Figure 2
Printed Circuit Board

The LED gives a visual indication of the wireless signal strength:

- Green indicates good signal strength and is a good location to install.
- Red indicates poor signal strength and the device should not be installed in that position.
- If no LED illuminates then the device is completely out of range.

Locations to install your smoke alarm

Smoke alarms should be installed in accordance with the NFPA Standard 72 (National Fire Protection Association). For complete coverage in residential units, smoke alarms should be installed in all rooms, halls, storage areas, basements, and attics in each family living unit. Minimum coverage is one alarm on each floor and one in each sleeping area.

Figure 3
Locations for placing smoke alarms for single residence with only one sleeping area

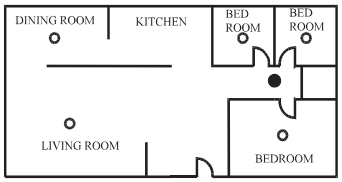

● Smoke alarms for minimum security
○ Smoke alarms for more security

Figure 4
Locations for placing smoke alarms for single-floor residence with more than one sleeping area

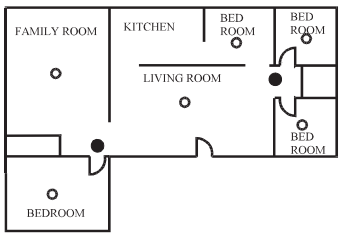

● Smoke alarms for minimum security
○ Smoke alarms for more security

Figure 5
Locations for placing smoke alarms for multi-floor residence

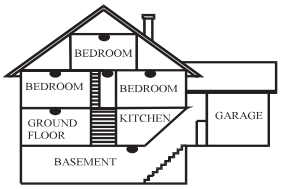

● Smoke alarms for minimum security

Some useful tips:

- Install a smoke alarm in the hallway outside every separate bedroom area, as shown in Figure 3. Two alarms are required in homes with two bedroom areas, as shown in Figure 4.
- Install a smoke alarm on every floor of a multi-floor home or apartment, as shown in Figure 5.
- Install a minimum of two alarms in any household.
- Install a smoke alarm inside every bedroom.
- Install smoke alarms at both ends of a bedroom hallway if the hallway is more than 40 feet (12 metres) long.

- Install a smoke alarm inside every room where one sleeps with the door partly or completely closed, since smoke could be blocked by the closed door and a hallway alarm may not wake up the sleeper if the door is closed.
- Install basement alarms at the bottom of the basement stairwell.
- Install second-floor alarms at the top of the first-to-second floor stairwell.

Be sure no door or other obstruction blocks the path of smoke to the alarm.

- Install additional alarms in your living room, dining room, family room, attic, utility and storage rooms.
- Install smoke alarms as close to the centre of the ceiling as possible. If this is not practical, put the alarm on the ceiling, no closer than 4 inches (10 cm) from any wall or corner, as shown in Figure 6.
- If ceiling mounting is not possible, put wall-mounted alarms between 4 and 6 inches (10 - 15 cm) from the ceiling, also see Figure 6.
- If some of your rooms have sloped, peaked, or gabled ceilings, try to mount alarms 3 feet (0.9 metres) measured horizontally from the highest point of the ceiling as shown in Figure 7.

Figure 6
Recommended best and acceptable locations to mount smoke alarms

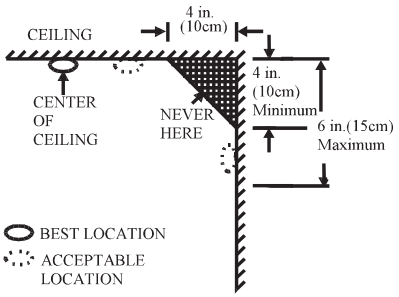

Figure 7
Recommended location to mount smoke alarms in rooms with sloped, gabled, or peaked ceiling

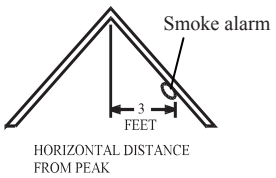

Locations not to install your smoke alarms

Nuisance alarms take place when smoke alarms are installed where they will not work properly. To avoid nuisance alarms, do not install smoke alarms in the following situations:

- Combustion particles are the by-products of something that is burning. Thus, in or near areas where combustion particles are present you do not install the smoke alarms to avoid nuisance alarms, such as kitchens with few windows or poor ventilation, garages where there may be vehicle exhaust fumes.
- Do not install smoke alarms less than 6 metres away from places where combustion particles are normally present, like kitchens. If a 20-foot distance is not possible, e.g. in a mobile home, try to install the alarm as far away from the combustion particles as possible, preferably on the wall. To prevent nuisance alarm alarms, provide good ventilation in such places.
- In air streams passing by kitchens. The way a smoke alarm senses combustion particles in normal air-flow paths is shown in Figure 8, indicating the correct and incorrect smoke alarm locations concerning this problem.
- In damp or very humid areas, or near bathrooms with showers. Moisture in humid air can enter the sensing chamber, then turn into droplets upon cooling, which can cause nuisance

alarms. Install smoke alarms at least 3 metres away from bathrooms.

- In very cold or very hot areas, including unheated buildings or outdoor rooms. If the temperature goes above or below the operating range of the smoke alarm, it will not work properly. The temperature range for your smoke alarm is -10°C~50°C
- In very dusty or dirty areas, dirt and dust can build up on the alarm's sensing chamber, to make it overly sensitive. Additionally, dust or dirt can block openings to the sensing chamber and keep the alarm from sensing smoke.
- Near fresh air vents or very drafty areas like air conditioners, heaters or fans, fresh air vents and drafts can drive smoke away from smoke alarms.
- Dead air spaces are often at the top of a peaked roof, or in the corners between ceilings and walls. Dead air may prevent smoke from reaching an alarm . See Figures 6 and 7 for recommended mounting locations.
- In insect-infested areas. If insects enter an alarm's sensing chamber, they may cause a nuisance alarm. Where bugs are a problem, get rid of them before putting up an alarm.
- Near fluorescent lights, electrical "noise" from fluorescent lights may cause nuisance alarms. Install smoke alarms at least 1.5 metres from such lights.

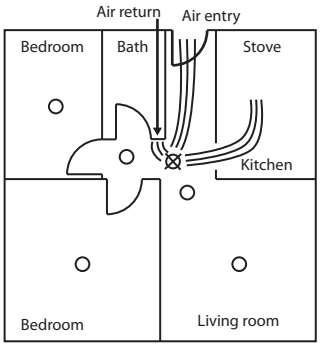

○ Correct location
⊠ Incorrect location

Figure 8
Recommended smoke alarm locations to avoid air streams with combustion particles

IMPORTANT: Do not disable the unit to avoid nuisance alarms.

WARNING: Never remove battery from smoke alarm to stop a nuisance alarm. Open a window or fan the air around the smoke alarm to get rid of the smoke. The alarm will turn itself off when the smoke is gone. If nuisance alarms persist, attempt to clean the smoke alarm as described in this manual.

WARNING: Do not stand close to the smoke alarm when the alarm is sounding. The alarm is loud in order to wake you in an emergency. Too much exposure to the piezo at close range may be harmful to your hearing.

Installing your smoke alarm

The Enforcer smoke alarm is made to be mounted on the ceiling or on the wall if necessary.

Read "LOCATIONS TO INSTALL YOUR SMOKE ALARMS" and "LOCATIONS NOT TO INSTALL YOUR SMOKE ALARMS" section in this manual first, then decide where to install an alarm.

Please follow these steps to install your smoke alarm:

1. At the place where you are going to install your smoke alarm, draw a horizontal line 15cm (6 inches) long.
2. Remove the mounting bracket from your unit by rotating it anticlockwise.
3. Place the bracket so that the two longest hole slots are aligned on the line. In each of keyhole slots, draw a mark to locate a mounting plug and screw.
4. Remove the bracket.
5. Using a 3/16-inch(5mm) drill bit, drill two holes at the marks and insert plastic wall plugs. Place the smoke alarm away from dust when drilling holes for mounting.
6. Using the two screws and plastic wall plugs (all supplied), attach the bracket to the wall.
7. Line up the slot of the bracket and the smoke alarm. Push the alarm onto the mounting bracket on turn it clockwise to fix it into place. Make sure the smoke alarm is securely attached to the mounting bracket.

Figure 9
The mounting bracket

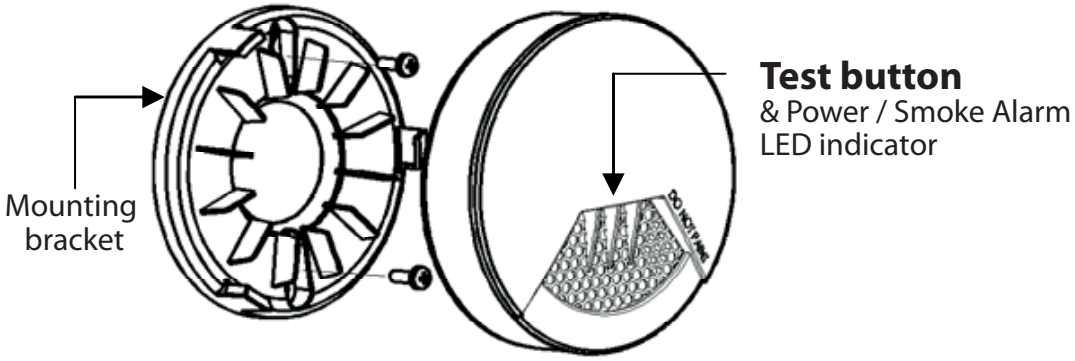

CAUTION: This smoke alarm comes with cover latches that will prevent the smoke alarm cover from closing if battery is not installed. This tells you that the smoke alarm will not work until a new battery is properly installed.

NOTE: When the alarm battery first makes contact with the alarm , the piezo sounder will beep. This means the smoke alarm is working normally and also indicates that the battery is positioned properly. Close cover, then press the test button, holding it down for about 3 seconds until the piezo sounds. The piezo should sound a loud, pulsating alarm. This means the unit is working properly.

Product specification

Battery: CR123A -3V, battery life greater than 2 years
Sensitivity: Meet with both UL217 and EN14604 standard
1.8%~3.1%
Sound level: 85dB/3m
Warning sound pattern: meet with UL/ULC standard
(Pre-setting at UL standard)
Alarm Audibility: 85dB/3m
Red alarm LED indication
Operation Temperature: -10°C~50°C
Relative Humidity : 10~95%
Size: 120mm diameter x 5.3mm depth
Transmission frequency: 868MHz, FM Transceiver narrow band
Transmission method: Fully encrypted rolling code
Transmission range: 300m free space
Indication: 2 LED indication (RSSI, battery status)

Standby mode

The red LED alarm indicator is featured with the smoke alarm. It can be seen through the clear test button on the cover of the unit. When red LED flashes once every 32 seconds, it indicates the smoke alarm is operating normally. When the smoke alarm senses smoke and simultaneously sounds an alarm with 3 beeps, pause and 3 beeps. The red LED will flash continuously and rapidly.

Low battery warning signal

If the alarm piezo begins to chirp once in 32 seconds with yellow LED flashing, this signal means that the smoke alarm's battery is weak. This low battery warning signal will be transmitted to the Enforcer control panel. You should replace the battery immediately to secure your protection.

Tamper switch feature

If the smoke alarm is not mounted into the bracket properly within 5 minutes after battery is installed, the tamper function is triggered and the yellow LED is steadily lit. The Enforcer control panel will indicate a tamper fault.

Testing your smoke alarm

Test the alarm weekly by pushing firmly on the test button with your finger for around 4 seconds until the piezo sounds, the sound pattern is 3 beeps, pause, and then 3 beeps with red LED flashing continuously and rapidly. See Figure 9, Page 5.

IMPORTANT: The smoke alarm will transmit the alarm signal to the Enforcer control panel, enter your code or present your tag to silence the alarm.

If the smoke alarm beeps once with yellow LED flashing three times in a minute, it indicates the smoke alarm is not working properly , it needs to be repaired or serviced. This is the only way to make sure that the smoke alarm unit is working properly. If the unit fails to test properly, have it repaired or replaced immediately. If you suspect that your smoke alarm does not go into alarm, test it by pressing the test button with your finger to ensure it works properly.

WARNING: Never use an open flame of any kind to test your alarm. You may set fire to and damage the alarm, as well as your home. The built-in test switch accurately tests all functions as required by Underwriters' Laboratories. They are the only correct ways to test the unit.

WARNING: When you are not testing the unit and the alarm piezo sounds this means the smoke alarm has sensed smoke or combustion particles in the air. Be sure that the alarm piezo is a warning of a possible serious situation, which requires your immediate attention.

- The alarm could be caused by a nuisance situation. Cooking smoke, sometimes called "friendly fire" can cause the alarm to sound. If this happens, open a window or fan the air to remove the smoke or dust. The alarm will turn off as soon as the air is completely clear. To silence the alarm at the Enforcer control panel, enter your code or present your tag.

NOTE: Do not disconnect the power or remove the battery from the smoke alarm. This will leave you unprotected.

- If the alarm piezo begins to beep once in 32 seconds with yellow LED flashing, this signal means that the smoke alarm's battery is weak. Replace new battery immediately. Keep fresh batteries on hand for this purpose.

NOTE: Use only the replacement battery listed below:
CR123A -3V

WARNING: Do not use any other kind of battery. This smoke alarm may not operate properly with another kind of battery

Battery installation

1. Open battery compartment (see figure 10)
2. Install battery into compartment and make sure the "+" and "-" ends of each battery are aligned properly.

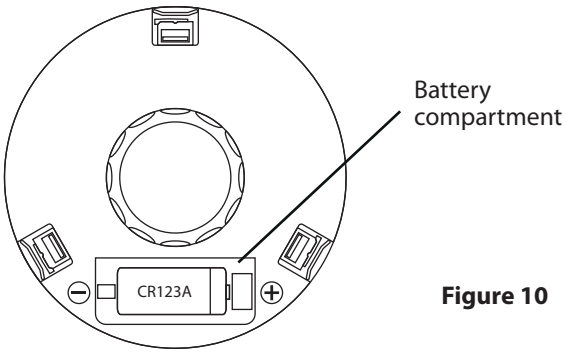

Figure 10

Taking care of your smoke alarm

Your smoke alarm is designed to be as maintenance free as possible. To keep your smoke alarm in good working condition, you must test the unit weekly, as referring to section "TESTING YOUR SMOKE ALARM".

Regular Maintenance:

- **Open the cover and vacuum the dust off the alarm's sensing chamber at least once a month.**

Remove battery before cleaning. To clean smoke alarm, use the soft brush attachment on your vacuum. Carefully remove any dust on smoke alarm components, especially on the openings of the sensing chamber. Replace battery after cleaning. Test the smoke alarm to make sure battery is working correctly. Never use liquid cleaners as they may damage the unit.

Figure 11

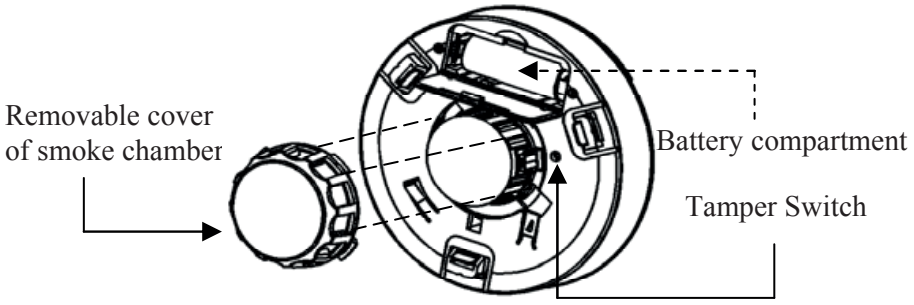

NOTE: If nuisance alarms keep coming from the unit , you should check whether the smoke alarm unit's location is adequate. Refer to section "WHERE TO INSTALL SMOKE ALARMS ". Move your smoke alarm if it is not located properly. Clean the unit as described above.

Limitations of smoke alarms

Although smoke alarms play a key role in reducing damage resulting from home fires, they can only work if they are properly installed, located and maintained.

- **Smoke alarm may not be heard if residents are hearing impaired.**
  Special designed units such as those with visual and audible alarms should be installed for hearing impaired residents.
- **Smoke alarm may not waken all individuals if they are sound sleepers.**
  If children or other family members do not waken readily to the sound of the smoke alarm , or if there are infants or members with mobility limitations, make sure someone is assigned to assist them in fire drill and in the event of emergency.